Confidential Information. Property of Merit Medical Systems, Inc.
Reproduction or use without written consent is prohibited.

DRAWING IS FOR REFERENCE ONLY

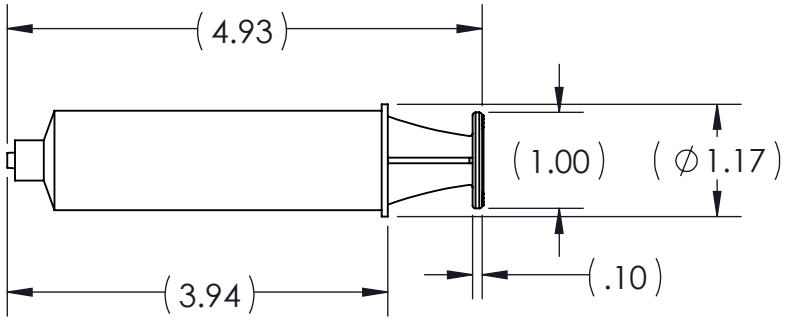

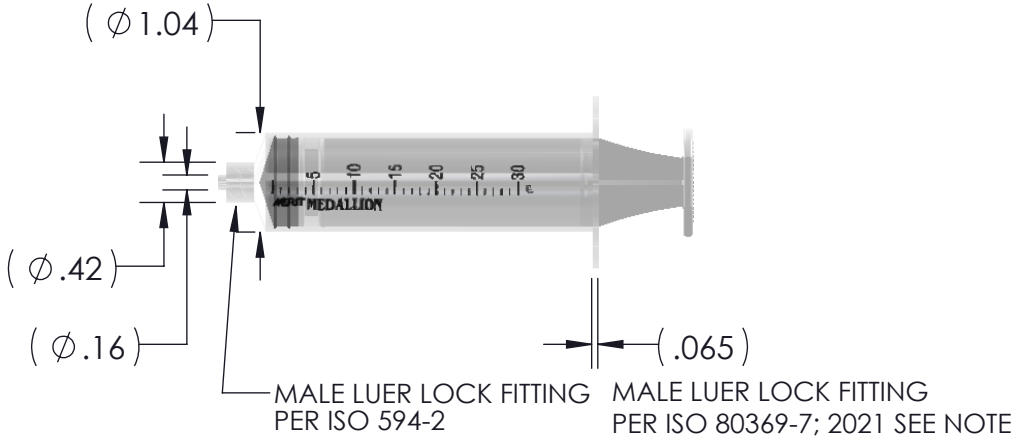


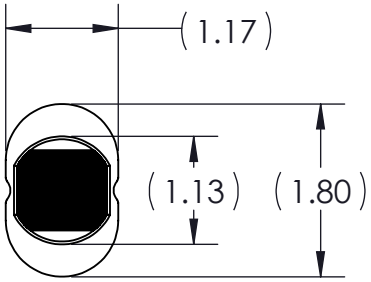


**NOTES**:
MATERIALS:

- BARREL: POLYCARBONATE (CLEAR)
- PLUNGER: ABS (LIGHT GREEN)
- SYRINGE TIP: SILICONE (BLACK)
- ISO 80369-7 COMPLIANCE TRANSITION IN PROCESS (CONTACT A BUSINESS MANAGER)
  https://meritoem.com/about/iso-80369-small-bore-connector-standard-iso-80369-7-for-vascular-and-intravenous-applications/

| | | | |
|---|---|---|---|
| MERIT MEDICAL | OEM | 1600 West Merit Parkway<br>South Jordan, Utah 84095 | |
| DRAWING TITLE: | SYRINGE, MEDALLION, 30ML, LIGHT GREEN | | |
| PART NUMBER: | MSS131-LGP | REV.: | N/A |
| UNLESS OTHERWISE SPECIFIED DIMENSIONS ARE FOR REFERENCE ONLY.<br>UNLESS OTHERWISE SPECIFIED DIMENSIONS ARE IN INCHES. | | DATE: | 04/15/2015 |