Confidential Information. Property of Merit Medical Systems, Inc.
Reproduction or use without written consent is prohibited.

DRAWING IS FOR REFERENCE ONLY

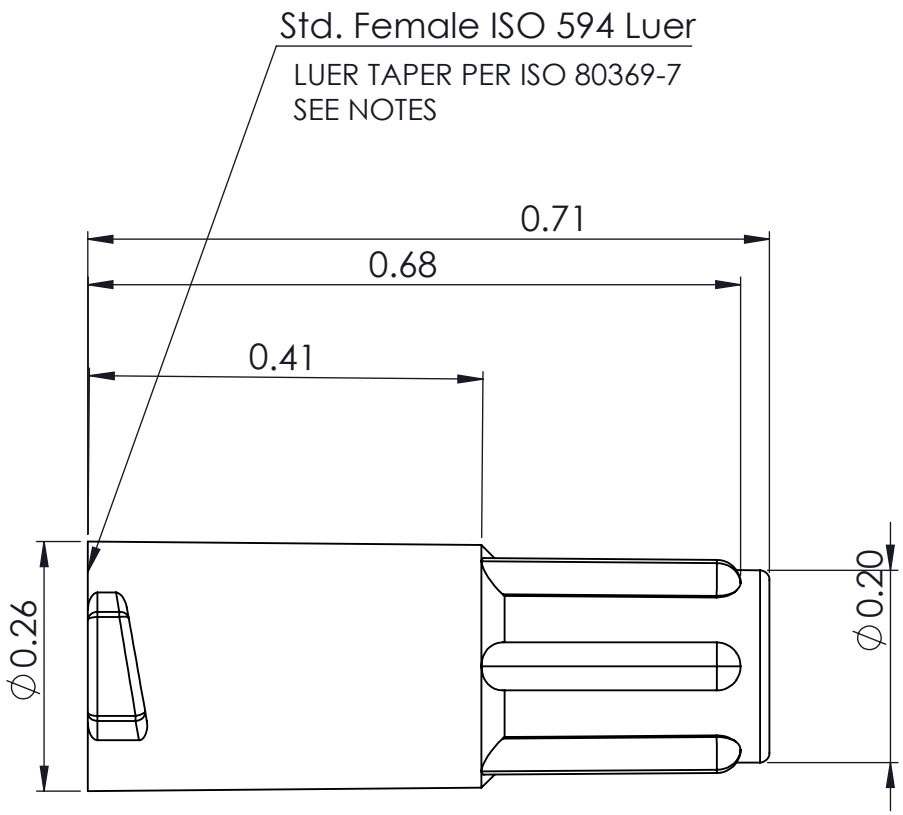

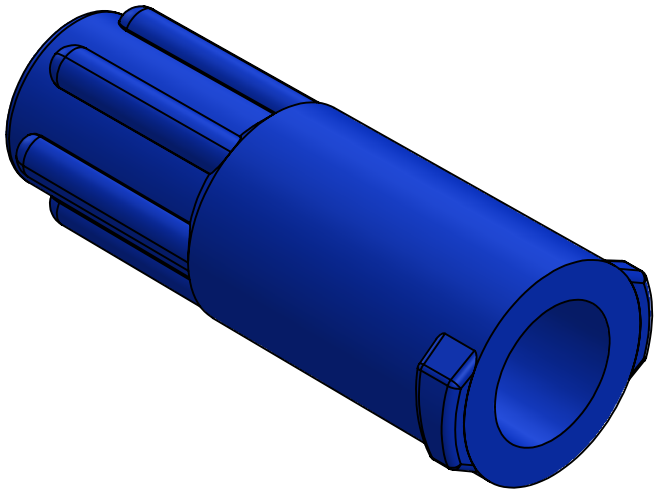

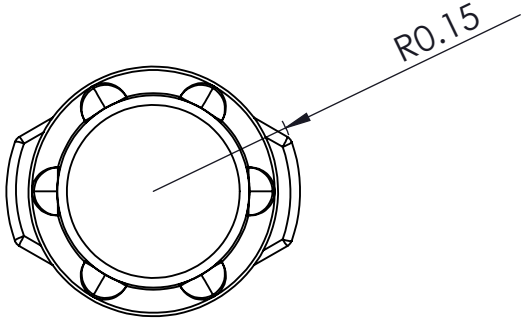

NOTES:
Material: POLYPROPYLENE (BLUE(
LUER TAPER PER ISO 80369-7 IN PROCESS
CONTACT CUSTOMER SERVICE
https://meritoem.com/about/iso-80369-small-bore-connector-standard-iso-80369-7-for-vascular-and-intravenous-applications/

	MERIT MEDICAL™	
	DRAWING TITLE: COVER, FEMALE,NON-VENTED, BLUE	
	PART NUMBER: 101020003	REV.: N/A
	UNLESS OTHERWISE SPECIFIED DIMENSIONS ARE FOR REFERENCE ONLY. UNLESS OTHERWISE SPECIFIED DIMENSIONS ARE IN INCHES.	DATE: 07/28/2015